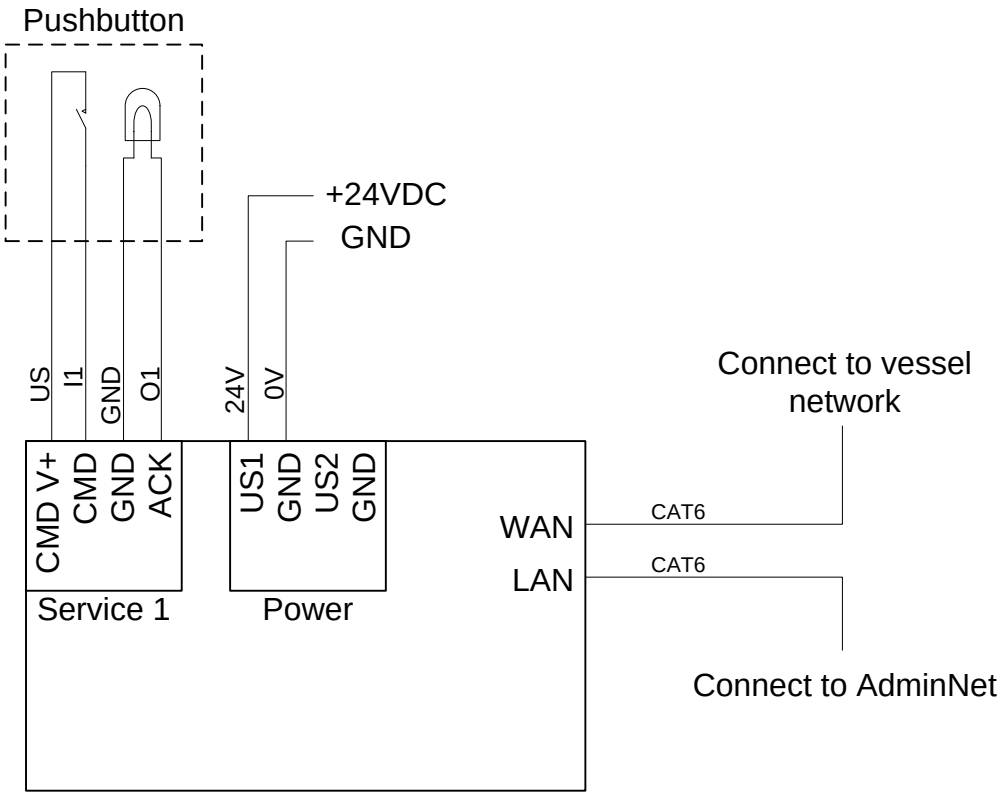


| Rev | Reason for revision | Date | Drawn | Appr |
|---|---|---|---|---|
| 00 | First issue | 20.06.17 | HS | GM |
| 01 | Added plug terminal names | 14.11.17 | HS | --- |
| --- | --- | --- | --- | --- |
| --- | --- | --- | --- | --- |
| --- | --- | --- | --- | --- |

| | | | |
|---|---|---|---|
| Project --- | Doc title Firewall std wiring | Drawn by HS | Issued by HS |
| Yard --- | | Checked by --- | Approved by --- |
| | | Sheet --- | Cont --- |
| | Drawing no. HMA-C-FIREWALL-WIRING | | Rev 01 |

høglund MARINE AUTOMATION